TOWN OF HULL, MASSACHUSETTS
NORTH NANTASKET BEACH DUNE RESTORATION AND ACCESSIBILITY

DECEMBER 2020

CONSERVATION ADMINISTRATOR
CHRISTIAN KRAHFORST

TOWN MANAGER
PHILLIP E. LEMNIOS

ASSISTANT DIRECTOR OF PUBLIC WORKS
JOHN STRUZZIERY

BUILDING COMMISSIONER
BARTLEY KELLY

CHIEF, FIRE DEPARTMENT
CHRISTOPHER RUSSO

CHIEF, POLICE DEPARTMENT
JOHN DUNN

SHEET INDEX

SHEET NO.	SHEET TITLE
G.01	LEGEND, NOTES, AND ABBREVIATIONS
G.02	EXISTING CONDITIONS
C.01	EROSION CONTROL PLAN
C.02	CONSTRUCTION PLAN
C.03	GRADING AND PLANTING PLAN
C.04	CIVIL DETAILS I
C.05	CIVIL DETAILS II
S.01	STRUCTURAL NOTES
S.02	RAMP PLAN
S.03	RAMP ELEVATIONS & CROSS SECTION
S.04	SECTIONS AND DETAILS

KLEINFELDER
Bright People. Right Solutions.

KLEINFELDER - ONE BEACON STREET SUITE 8100 | BOSTON, MA, 02108 | PH: 617.497.7800 | FAX: 617.498.4630 | www.kleinfelder.com

GENERAL NOTES

1. SPOT GRADE ELEVATIONS INDICATED ON THE EXISTING CONDITIONS DRAWINGS AND BASE PLANS ARE BASED ON ACTUAL ON THE GROUND FIELD SURVEY CONDUCTED BY WOODS HOLE GROUP, INC IN JANUARY 2020.
2. THE HORIZONTAL DATUM SHOWN HEREON REFERENCES THE MASSACHUSETTS STATE PLANE COORDINATE SYSTEM NAD83.
3. THE VERTICAL DATUM SHOWN HEREON REFERENCES NAVD88.
4. FLOOD ZONES ARE AS SHOWN ON FEMA FIRM PANEL #25023C0036J.
5. PRIOR TO BEGINNING WORK, CONTRACTOR SHALL FIELD VERIFY EXISTING CONDITIONS INFORMATION AND REPORT AND DISCREPANCIES BETWEEN THE PLANS AND THE ACTUAL CONDITIONS TO THE ENGINEER.
6. THE MAJORITY OF THE WORK IS LOCATED ABOVE THE HIGH WATER LEVEL HOWEVER, WHENEVER WORK IS CONDUCTED WITHIN AREAS OF TIDAL INFLUENCE THE CONTRACTOR SHALL BE RESPONSIBLE FOR KEEPING TIDAL WATERS OUT OF THE WORK AREA AND/OR SCHEDULING THE WORK BETWEEN TIDES WITH NO ADDITIONAL COST TO THE OWNER. CONTRACTOR SHALL BE AWARE OF PREDICTED TIDAL CONDITIONS, AS MAY BE AFFECTED BY STORM EVENTS, AND COORDINATE WORK WITH THIS KNOWLEDGE.
7. THE LOCATIONS OF EXISTING UNDERGROUND UTILITIES ARE SHOWN APPROXIMATELY AND HAVE NOT BEEN INDEPENDENTLY VERIFIED BY THE OWNER OR IT'S REPRESENTATIVE.
8. THE CONTRACTOR SHALL CONTACT THE APPROPRIATE UTILITY COMPANY, ANY GOVERNING PERMITTING AUTHORITY, AND "DIG SAFE" (1-800-344-7233) AT LEAST 72-HOURS PRIOR TO ANY EXCAVATION WORK REQUIRED TO REQUEST EXACT FIELD LOCATION OF UTILITIES.
9. CONTRACTOR SHALL COORDINATE WITH UTILITY OWNER OF ANY EXISTING UTILITIES THAT ARE LOCATED WITHIN THE WORK ZONE REGARDING SUPPORT OR RELOCATION NECESSARY TO COMPLETE WORK. CONTRACTOR'S BID SHALL INCLUDE COSTS ASSOCIATED WITH UTILITY SUPPORT, IN ACCORDANCE WITH UTILITY OWNER REQUIREMENTS.
10. EXISTING UTILITY POLES THAT FALL WITHIN 5 FEET OF THE EDGE OF EXCAVATION SHALL BE SUPPORTED BY THE OWNER OF THE UTILITY, TO BE COORDINATED BY THE CONTRACTOR WHILE TRENCH REMAINS ACTIVE. CONTRACTOR SHALL COORDINATE WITH THE UTILITY OWNER TO SUPPORT AND BE RESPONSIBLE FOR COSTS AND FEES. CONTRACTOR SHALL BE RESPONSIBLE FOR SUPPORTING THE EXISTING UTILITY IN ACCORDANCE WITH THE UTILITY OWNER'S REQUIREMENTS.
11. ALL TRENCHING, BACKFILLING AND RESTORATION SHALL BE PERFORMED IN ACCORDANCE WITH LOCAL AND FEDERAL OSHA REGULATIONS.
12. UPON COMPLETION OF THE WORK ALL DISTURBED AREAS SHALL BE RESTORED TO A CONDITION EQUAL TO OR BETTER THAN THAT WHICH EXISTED PRIOR TO CONSTRUCTION.
13. LANDSCAPED AREAS, FEATURES, PLANTINGS SHALL BE INSTALLED UPON RESTORED SURFACES AS SPECIFIED AND DETAILED HEREIN.
14. CONTRACTOR SHALL REPLACE EXISTING PERMANENT PAVEMENT MARKINGS IN-KIND WHEREVER THEY ARE DISTURBED AS A RESULT OF HIS WORK.
15. CONTRACTOR SHALL PHOTOGRAPH AND TAG ALL MUNICIPAL SIGNS IN THE PROJECT AREA. SIGNS SHALL BE DISMOUNTED, PROTECTED, STORED AND THEN REINSTALLED AS INDICATED ON THE CONTRACT DRAWINGS OR AS INSTRUCTED BY OWNER.

SOIL EROSION AND SEDIMENT CONTROL NOTES

1. TEMPORARY STOCKPILING OF CONSTRUCTION MATERIALS SHALL BE COORDINATED WITH THE TOWN. STOCKPILE AREAS SHALL BE SURROUNDED ON THEIR PERIMETERS WITH STAKED STRAW HAYBALES & SILTATION FENCES AND/OR COVER THE STOCKPILES WITH PLASTIC TO PREVENT AND/OR CONTROL SILTATION AND EROSION.
2. ALL EXISTING CATCH BASINS LOCATED WITHIN THE PROJECT SITE SHALL BE PROTECTED BY FIBER ROLLS AND BY PLACING SILT SACKS BENEATH THE GRATE UNTIL ALL DISTURBED AREAS HAVE BEEN THOROUGHLY STABILIZED.
3. CATCH BASINS WITH SILT SACKS, WHICH SERVE AS TEMPORARY SEDIMENT TRAPS, SHALL BE INSPECTED ON A WEEKLY BASIS AND AFTER EACH RAINFALL EVENT. THE CONTRACTOR SHALL BE RESPONSIBLE FOR THE REMOVAL OF SEDIMENT FROM EACH SILT BAG WHEN EXPANSION RESTRAINT CORD IS NO LONGER VISIBLE PER MANUFACTURER'S RECOMMENDATION.
4. UPON COMPLETION OF ALL SITE WORK CONSTRUCTION THE CONTRACTOR SHALL INSPECT ALL ON-SITE CATCH BASINS, AND SEDIMENT TRAPS AND REMOVE ALL SEDIMENT AND TRASH DEBRIS THAT HAS ACCUMULATED WITHIN EACH STRUCTURE DURING THE COURSE OF CONSTRUCTION.
5. THE CONTRACTOR SHALL BE RESPONSIBLE FOR DUST CONTROLS DURING CONSTRUCTION. CONTRACTOR SHALL BE PREPARED TO UTILIZE WATER OR CALCIUM CHLORIDE TO SUPPRESS DUST ON SITE.

TRAFFIC CONTROL NOTES

1. CONTRACTOR SHALL MAINTAIN ACCESS TO ALL PROPERTIES THROUGHOUT CONSTRUCTION, UNLESS WRITTEN APPROVAL IS PROVIDED BY THE OWNER.
2. ALL TEMPORARY TRAFFIC CONTROL WORK SHALL CONFORM TO THE LATEST EDITION OF THE "MANUAL ON UNIFORM TRAFFIC CONTROL DEVICES" (MUTCD) AND ALL REVISIONS.
3. TEMPORARY CONSTRUCTION SIGNING AND ALL OTHER TRAFFIC CONTROL DEVICES SHALL BE IN PLACE PRIOR TO THE START OF ANY WORK.
4. CONTRACTORS SHALL NOTIFY EACH ABUTTER AT LEAST 24 HOURS IN ADVANCE OF THE START OF ANY WORK THAT WILL REQUIRE THE TEMPORARY CLOSURE OF ACCESS, SUCH AS EXISTING PAVEMENT EXCAVATION, GRADING, PAVEMENT PLACEMENT AND SIMILAR OPERATIONS.
5. CONTRACTOR SHALL PROVIDE ACCESS FOR EMERGENCY VEHICLES AT ALL TIMES.
6. CONTRACTOR SHALL SCHEDULE AND COORDINATE UNIFORMED POLICE FOR TRAFFIC CONTROL FOR WORK WITHIN TOWN STREETS. TOWN SHALL PAY FOR POLICE.
7. CONTRACTOR SHALL MAINTAIN SIDEWALKS AT ALL TIMES THROUGH THE CONSTRUCTION PERIOD. THE CONTRACTOR SHALL PROVIDE AND MAINTAIN PEDESTRIAN WALKWAYS WHERE EXISTING WALKWAYS ARE IN CLOSE PROXIMITY TO EXCAVATIONS OR WORK AREAS OR ARE OTHERWISE OBSTRUCTED.

SAND DUNE RESTORATION NOTES (WORK BY OWNER)

1. PERFORMANCE OF WORK SHALL BE IN COMPLIANCE WITH THE PLANS AND DETAILS, AND ORDER OF CONDITIONS ISSUED BY THE TOWN OF HULL CONSERVATION COMMISSION OR OTHER REGULATORY AGENCY FOR THE REFERENCED PROJECT PRESENTED ON THESE PLANS.
2. THE PURPOSE OF THIS PROJECT IS TO RESTORE DUNE AND BEACH RESOURCES NEAR A STREET IN HULL, MASSACHUSETTS. THE PROJECT CONSISTS OF DUNE RESTORATION AS SHOWN ON THE PLAN AND DETAILS. THE PROPOSED WORK INCLUDES THE CONSTRUCTION OF A COASTAL DUNE THAT REPLICATES CONDITIONS SIMILAR TO THE NEIGHBORING NATURAL DUNE ELEVATIONS. THE GOALS OF THE DUNE RESTORATION ARE TO BUILD RESILIENCY, ENHANCE STORM DAMAGE PROTECTION, AND PROVIDE IMPROVED HABITAT.
3. CONSTRUCTION ACCESS IS DIRECTLY AVAILABLE VIA THE ADJACENT ROADWAY (INDICATED ON PLAN). UPON COMPLETION ALL DISTURBED AREAS SHALL BE RE-GRADED AND RE-VEGETATED TO MATCH PRE-CONSTRUCTION CONDITIONS.
4. NOURISHMENT MATERIAL SHALL BE CLEAN, BEACH-COMPATIBLE, SAND BROUGHT TO THE SITE BY THE CONTRACTOR. IT IS REQUIRED THAT THE SEDIMENT SOURCE SHALL BE TESTED TO ENSURE ADEQUATE BEACH COMPATIBILITY PRIOR TO ANY PLACEMENT OF THE NOURISHMENT MATERIAL. DEPENDING ON THE SOURCE OF THE SEDIMENT, ADDITIONAL PERMITS MAY BE REQUIRED. DEPENDING ON THE ULTIMATE SAND SOURCE, STILLING BASINS AND BERMS MAY BE REQUIRED IF DREDGED MATERIAL IS A COMPONENT OF THE OVERALL RESTORATION PROJECT. STILLING BASIN AND BERM APPROACHES FOR DEWATERING SEDIMENT SHALL BE APPROVED BY THE ENGINEER AND THE REPRESENTATIVE OF THE CONSERVATION COMMISSION.
5. ALL WORK CREATING THE PROPOSED DUNE SLOPES AND ELEVATIONS SHALL BE COMPLETED FROM THE ROADWAY FOR THE DUNE RECONSTRUCTION.
6. DURING PERIODS OF HIGH WATER LEVELS, ALL EQUIPMENT SHALL BE MOVED VIA THE CONSTRUCTION ACCESS AREA TO PREDETERMINED STAGING AREAS.
7. THE RESTORATION PROJECT SPECIFIES DUNE CREST ELEVATIONS AT 16.0 FEET NAVD88 SHALL MATCH THE ELEVATION OF THE SURROUNDING DUNES.
8. THE PROPOSED DUNE RESTORATION SHALL BE PLACED ENTIRELY ABOVE MEAN HIGH WATER AND EXTEND LANDWARD TO THE EDGE OF THE EXISTING ROADWAY.
9. AFTER PLACEMENT, THE DUNE AND BEACH MATERIAL SHALL BE GRADED TO THE DUNE AND BERM WIDTHS, SLOPES AND ELEVATIONS INDICATED ON THE PLANS.
10. THIS PLAN REPRESENTS THE PRE-CONSTRUCTION SURVEY. IF A SIGNIFICANT STORM OCCURS BEFORE CONSTRUCTION, AN ADDITIONAL SURVEY MAY BE REQUIRED.
11. ALL DUNE AND BEACH ELEVATIONS, SLOPES, HEIGHTS, ETC. SHALL BE SMOOTHLY TAPERED BETWEEN THE VARIOUS CROSS SECTIONS TO BLEND WITH EXISTING GRADES AT THE EDGES OF THE PROPOSED NOURISHMENT.
12. FOLLOWING FINAL GRADING OF THE DUNE ENHANCEMENT, THE DUNE SHALL BE PLANTED WITH VEGETATION INDIGENOUS TO THE ENVIRONMENT, SUCH AS AMERICAN BEACH GRASS. THE PLANTINGS SPACING SHALL FOLLOW THE DETAILS PRESENTED ON THE PLAN AND ONLY EXTEND ON THE AREAS INDICATED ON THE PLAN.
13. DISTURBED AREAS THROUGH CONSTRUCTION ACCESS WAYS OR IN STAGING AREAS SHALL BE RETURNED TO PRE-PROJECT CONDITIONS. THIS IS EXPECTED TO INCLUDE RE-GRADING, STABILIZATION, AND PLANTING WITH VEGETATION INDIGENOUS TO THE ENVIRONMENT, SUCH AS BEACH GRASS, UPON COMPLETION OF THE WORK.
14. THE DUNE AND BEACH SYSTEM SHALL BE INSPECTED BY THE ENGINEER FOLLOWING THE COMPLETION OF THE WORK, AS WELL AS APPROXIMATELY 90 DAYS (THREE FULL LUNAR TIDAL CYCLES) AFTER CONSTRUCTION.

DEMOLITION NOTES

1. CONTRACTOR SHALL REMOVE AND DISPOSE OF ALL DEMOLISHED MATERIALS, RUBBISH, EXCAVATED MATERIAL AND DEBRIS, UNLESS OTHERWISE NOTED, AND IN ACCORDANCE WITH ALL LOCAL, STATE, AND FEDERAL REQUIREMENTS HAVING JURISDICTION. THE CONTRACTOR SHALL BE RESPONSIBLE FOR OBTAINING AND PAYING FOR ALL DISPOSAL PERMITS AT NO ADDITIONAL COST TO THE OWNER.
2. CONTRACTOR SHALL DISPOSE OF ASPHALT, BRICK, AND CONCRETE IN ACCORDANCE WITH APPLICABLE LOCAL AND STATE REGULATIONS
3. THE CONTRACTOR SHALL BE RESPONSIBLE FOR OBTAINING AND PAYING FOR ANY PERMITS AND/OR FEES REQUIRED TO CARRY OUT THE WORK INCLUDING BUT NOT LIMITED TO DEMOLITION.

ABBREVIATIONS

B.O.	BOTTOM OF
CB	CATCH BASIN
℄ or CL.	CENTER LINE
EA.	EACH
E.F.	EACH FACE
E.W.	EACH WAY
EL.	ELEVATION
EXIST.	EXISTING
N.T.S	NOT TO SCALE
O.C.	ON CENTER
PROP	PROPOSED
T.O.	TOP OF
T.O.C.	TOP OF CONCRETE
TYP.	TYPICAL
U.N.O.	UNLESS NOTED OTHERWISE
V.I.F.	VERIFY IN FIELD

EXISTING LEGEND

(10)	EXISTING 5' CONTOUR
(4)	EXISTING 1' CONTOUR
	NHESP PRIORITY HABITAT BOUNDARY
	COASTAL DUNE
—X—X—	SAND FENCE
(13.33)	EXISTING SPOT GRADE
B1	GRAIN SIZE SAMPLE LOCATION (BEACH)
D1	GRAIN SIZE SAMPLE LOCATION (DUNE)
	CATCH BASIN
	SIGN
	UTILITY POLE
	GUY WIRE

PROPOSED LEGEND

	SILT FENCE
SS	SILT SACK
	TEMPORARY CONSTRUCTION FENCE
—X—X—	SAND FENCE
	ACCESS MAT
	CONCRETE LANDING
	PROPOSED RAMP STRUCTURE
	PROPOSED SIGN
15.58	PROPOSED SPOT GRADE
— 15 —	PROPOSED 5' CONTOUR
— 14 —	PROPOSED 1' CONTOUR

KLEINFELDER
Bright People. Right Solutions.

No.	Description	Date
	REVISIONS	

Scale	AS NOTED
Date	DEC 2020
Job No.	20202506.001A
Designed by	CD
Drawn by	CD
Checked by	NB
Approved by	NB

12/23/2020

Client: TOWN OF HULL, MASSACHUSETTS
Project: NORTH NANTASKET BEACH DUNE RESTORATION AND ACCESSIBILITY
Drawing: LEGEND, NOTES, AND ABBREVIATIONS
Sheet: G.01

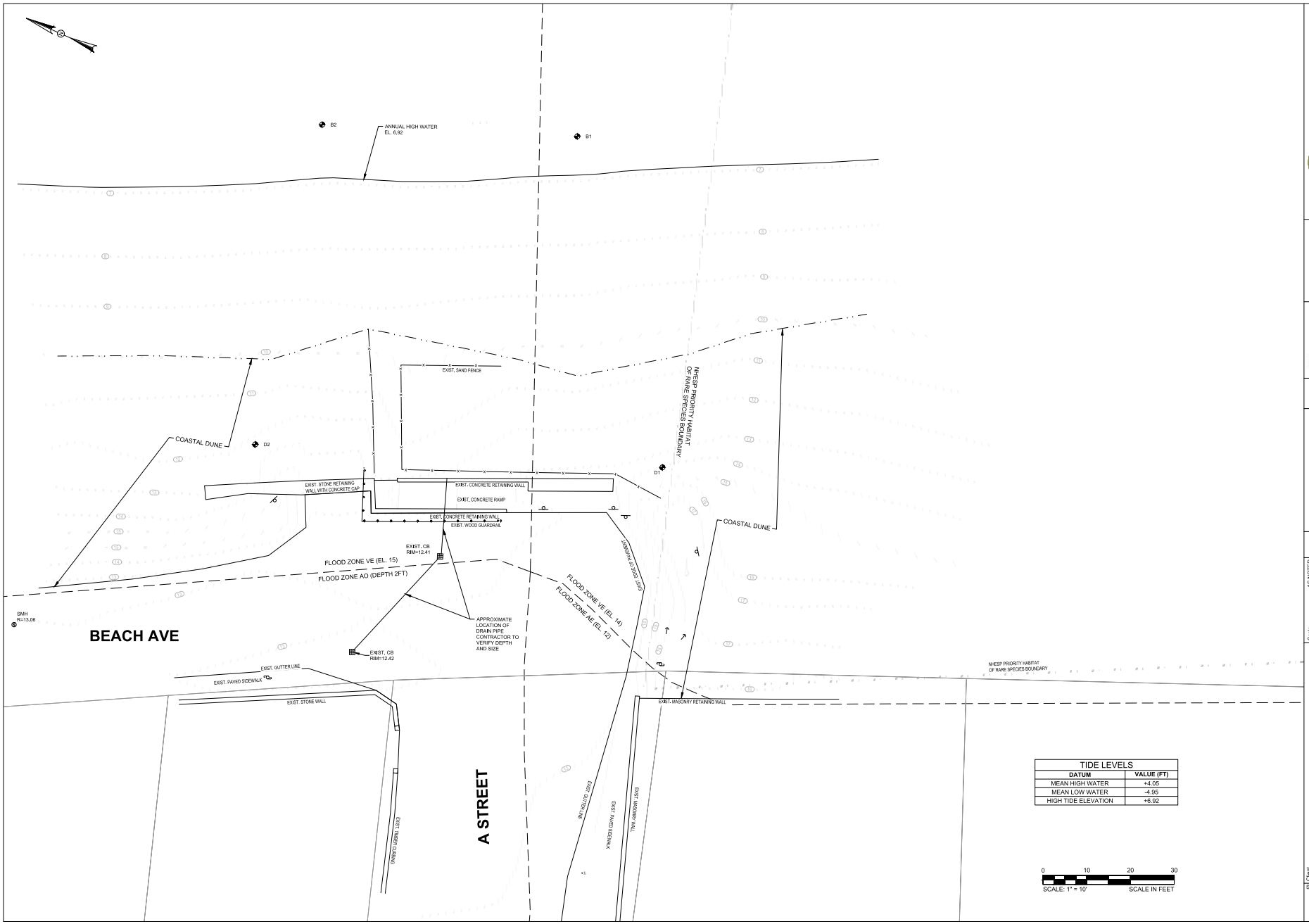

TIDE LEVELS	
DATUM	VALUE (FT)
MEAN HIGH WATER	+4.05
MEAN LOW WATER	-4.95
HIGH TIDE ELEVATION	+6.92

KLEINFELDER
Bright People. Right Solutions.

BRIAN J. MONTEJUNAS
CIVIL
No. 47347
12/23/2020

No.	Description	Date
	REVISIONS	

Scale	AS NOTED
Date	DEC 2020
Job No.	20202506.001A
Designed by	CD
Drawn by	CD
Checked by	NB
Approved by	NB

Client: TOWN OF HULL, MASSACHUSETTS

Project: NORTH NANTASKET BEACH DUNE RESTORATION AND ACCESSIBILITY

Drawing: EXISTING CONDITIONS PLAN

Sheet: G.02

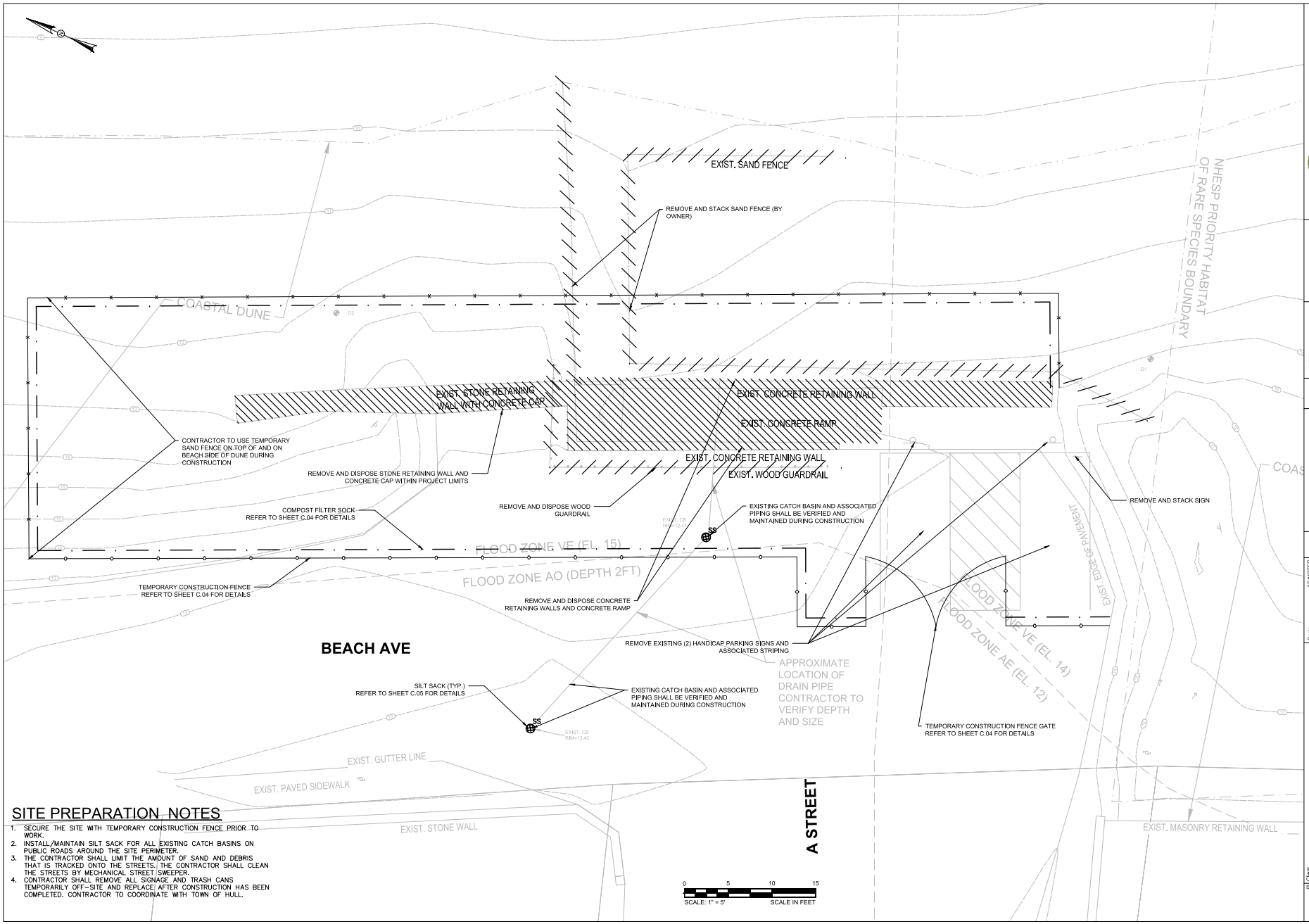

SITE PREPARATION NOTES

1. SECURE THE SITE WITH TEMPORARY CONSTRUCTION FENCE PRIOR TO WORK.
2. INSTALL/MAINTAIN SILT SACK FOR ALL EXISTING CATCH BASINS ON PUBLIC ROADS AROUND THE SITE PERIMETER.
3. THE CONTRACTOR SHALL LIMIT THE AMOUNT OF SAND AND DEBRIS THAT IS TRACKED ONTO THE STREETS. THE CONTRACTOR SHALL CLEAN THE STREETS BY MECHANICAL STREET SWEEPER.
4. CONTRACTOR SHALL REMOVE ALL SIGNAGE AND TRASH CANS TEMPORARILY OFF-SITE AND REPLACE AFTER CONSTRUCTION HAS BEEN COMPLETED. CONTRACTOR TO COORDINATE WITH TOWN OF HULL.

KLEINFELDER
Bright People. Right Solutions.

Scale	AS NOTED
Date	DEC 2020
Job No.	20202596.001A
Designed by	CD
Drawn by	CD
Checked by	BM
Approved by	BM

No.	Description	Date
	REVISIONS	

Client: TOWN OF HULL, MASSACHUSETTS

Project: NORTH NANTASKET BEACH DUNE RESTORATION AND ACCESSIBILITY

Drawing: SITE PREPARATION AND EROSION CONTROL PLAN

Sheet: C.01

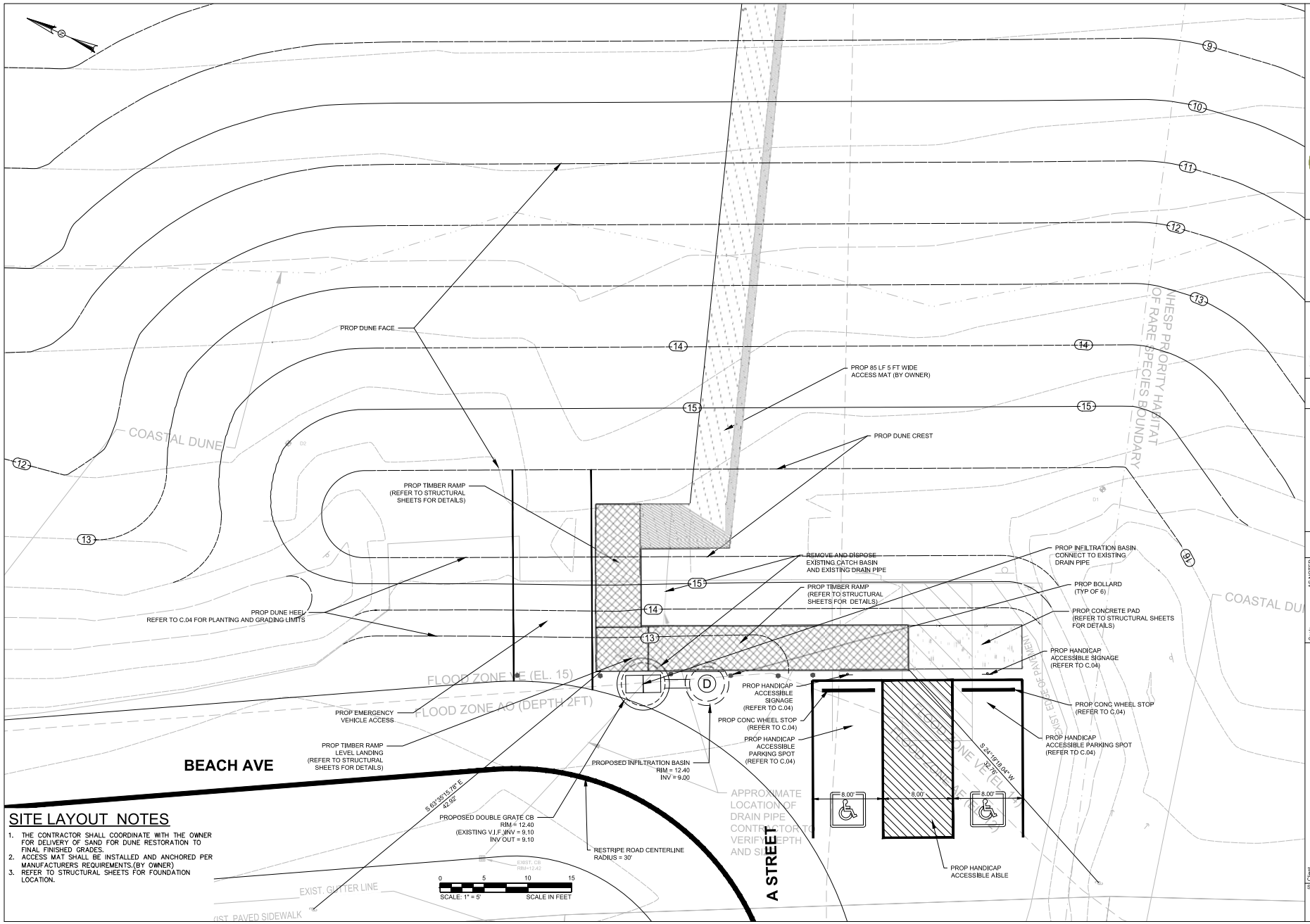

SITE LAYOUT NOTES

1. THE CONTRACTOR SHALL COORDINATE WITH THE OWNER FOR DELIVERY OF SAND FOR DUNE RESTORATION TO FINAL FINISHED GRADES.
2. ACCESS MAT SHALL BE INSTALLED AND ANCHORED PER MANUFACTURERS REQUIREMENTS.(BY OWNER)
3. REFER TO STRUCTURAL SHEETS FOR FOUNDATION LOCATION.

KLEINFELDER
Bright People. Right Solutions.

Scale	AS NOTED
Date	DEC 2020
Job No.	20202506.001A
Designed by	CD
Drawn by	CD
Checked by	NB
Approved by	NB

No.	Description	Date
	REVISIONS	

Client: TOWN OF HULL, MASSACHUSETTS

Project: NORTH NANTASKET BEACH DUNE RESTORATION AND ACCESSIBILITY

Drawing: CONSTRUCTION PLAN

Sheet: C.02

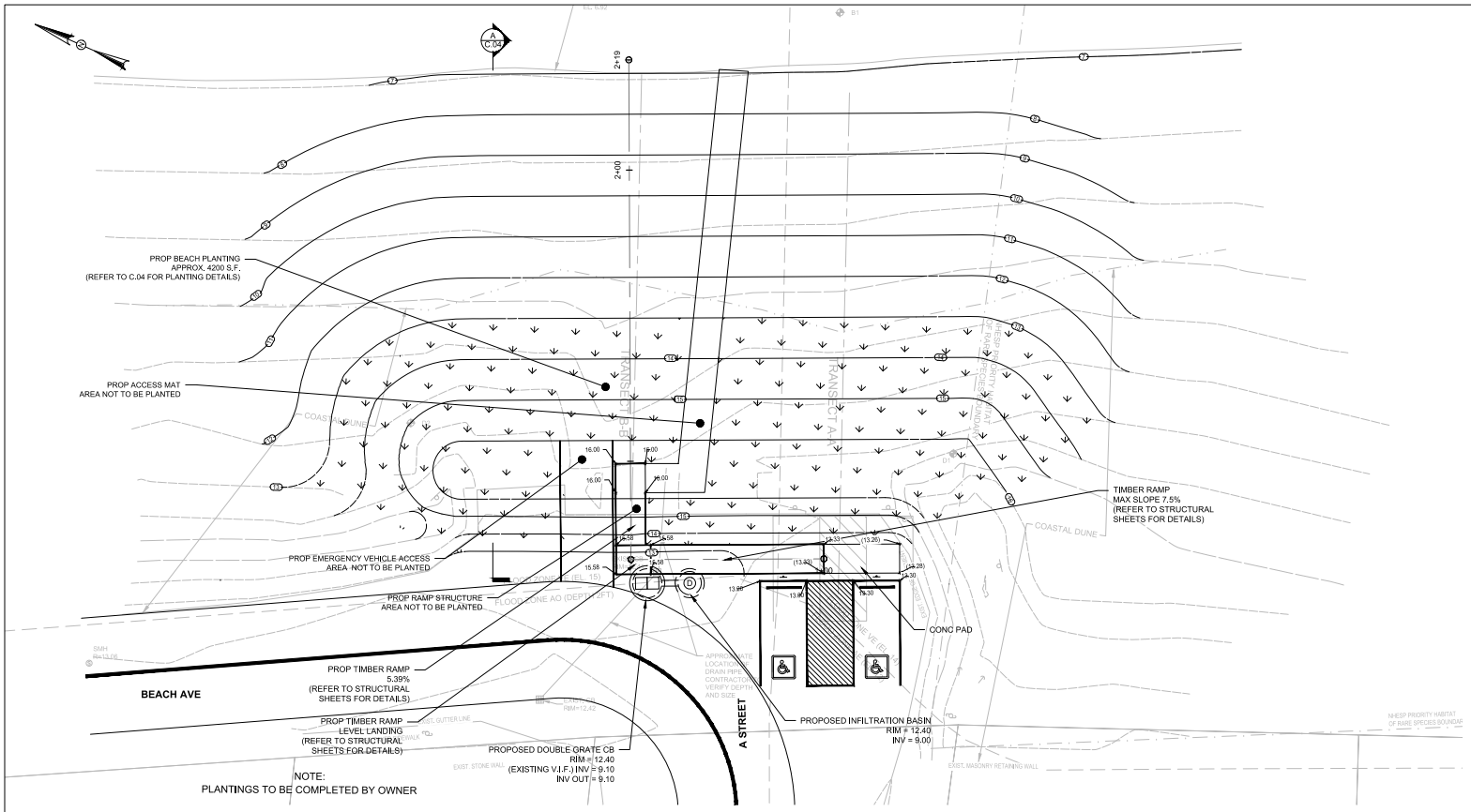

SCALE: 1" = 10' SCALE IN FEET

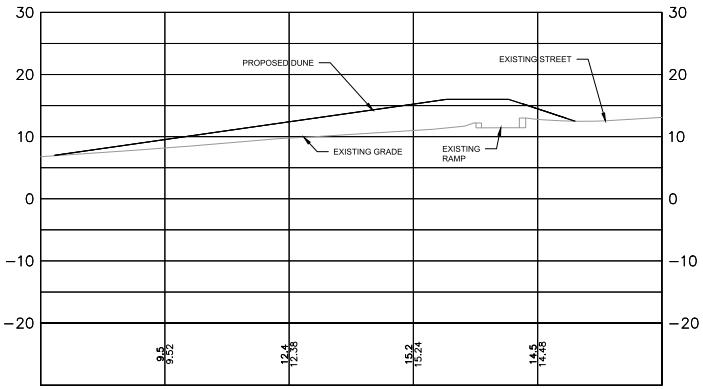

SECTION A
SCALE: 1" = 10'

GRADING NOTES

1. ALL CROSS-SLOPES SHALL NOT EXCEED 2.0%

KLEINFELDER
Bright People. Right Solutions.

Scale	AS NOTED
Date	DEC 2020
Job No.	20202516.001A
Designed by	CD
Drawn by	CD
Checked by	NB
Approved by	NB

No.	Description	Date
	REVISIONS	

Client: TOWN OF HULL, MASSACHUSETTS

Project: NORTH NANTASKET BEACH DUNE RESTORATION AND ACCESSIBILITY

Drawing: GRADING AND PLANTING PLAN

Sheet: C.03

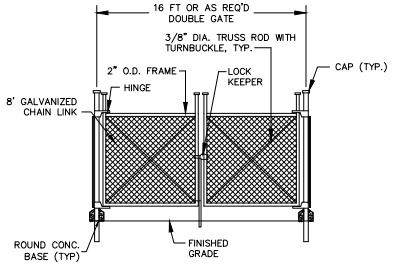

DOUBLE GATE DETAIL

SCALE: N.T.S.

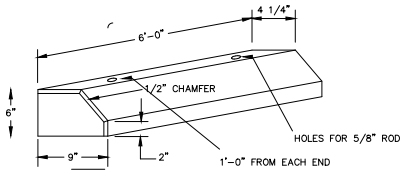

NOTES:

1. BUMPER LOG SHALL BE SECURED WITH TWO 18-INCH (MAX) LONG, 5/8-INCH DIAMETER STEEL REINFORCING RODS DRIVEN THROUGH THE BITUMINOUS CONCRETE PAVING.
2. BUMPER LOG SHALL BE REINFORCED WITH 4- #3 BARS.
3. CONCRETE SHALL BE AIR-ENTRAINED WITH MINIMUM 4,000 P.S.I., 28 DAY COMPRESSIVE STRENGTH.

CONCRETE WHEEL STOP DETAIL

SCALE: N.T.S.

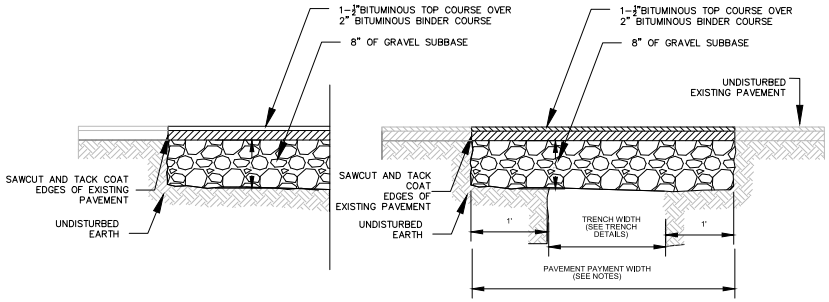

NOTES:
PERMANENT TRENCH PAVEMENT PAYMENT WIDTH SHALL BE THE TRENCH PAY LIMIT PLUS 2 FEET
TEMPORARY TRENCH PAVEMENT PAYMENT WIDTH SHALL BE EQUAL TO THE TRENCH PAYMENT LIMIT
REMOVE AND DISPOSE ALL TEMPORARY PAVEMENT AS REQUIRED, RESTORE AND COMPACT
SUBBASE AS REQUIRED PRIOR TO PERMANENT TRENCH PAVEMENT.

PERMANENT TRENCH AND PATCH RESTORATION PAVEMENT DETAIL

SCALE: N.T.S.

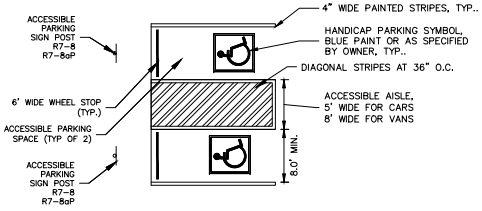

ACCESSIBLE PARKING SPACE DETAIL

SCALE: N.T.S.

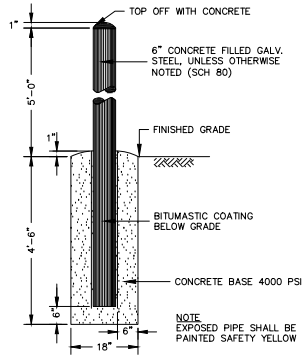

TYPICAL BOLLARD

SCALE: N.T.S.

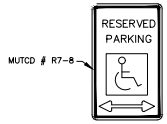

NOTES:

1. BOTTOM OF SIGNAGE SET MINIMUM 5' ABOVE FINISHED GRADE.

ACCESSIBLE PARKING SIGN

SCALE: N.T.S.

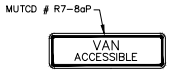

VAN ACCESSIBLE SIGN

SCALE: N.T.S.

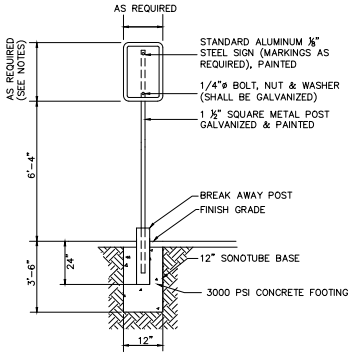

NOTES

1. SIGN POST SHALL BE CONSTRUCTED 6" FROM CURB UNLESS OTHERWISE NOTED ON PLANS.
2. HANDICAPPED PARKING SIGN HEIGHT NOT TO EXCEED 8' TOTAL HEIGHT.

ACCESSIBLE PARKING SIGN POST DETAIL

SCALE: N.T.S.

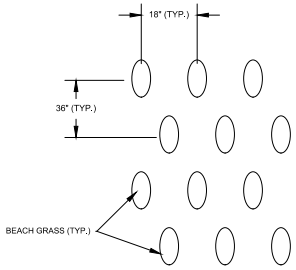

PLANTING NOTES:

1. PLANTS AND ROOTS SHALL BE KEPT MOIST BEFORE AND DURING PLANTING.
2. BEACH GRASS SHALL BE PLANTED IN 2-3 CULMS PER HOLE.
3. PLANT 2 OR 3 – 18"-24" STEMS IN A HOLE, APPROXIMATELY 7"-9" DEEP.
4. COMPACT THE SAND FIRMLY AROUND THE PLANTS.

BEACH GRASS PLANTING DETAIL

SCALE: N.T.S.

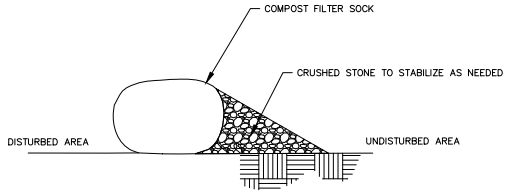

NOTES:

1. UPON COMPLETION OF THE PROJECT, THE CONTRACTOR SHALL REMOVE THE COMPOST FILTER SOCK AND CRUSHED STONE. CONTRACTOR SHALL STABILZE THE GROUND SURFACE WITH SEED AND FERTILIZER.

COMPOST FILTER SOCK

SCALE: N.T.S.

KLEINFELDER
Bright People. Right Solutions.

Scale	AS NOTED
Date	DEC 2020
Job No.	20202506.001A
Designed by	CD
Drawn by	CD
Checked by	NB
Approved by	NB

No.	Description	Date
	REVISIONS	

Client: TOWN OF HULL, MASSACHUSETTS

Project: NORTH NANTASKET BEACH DUNE RESTORATION AND ACCESSIBILITY

Drawing: CIVIL DETAILS

Sheet: C.04

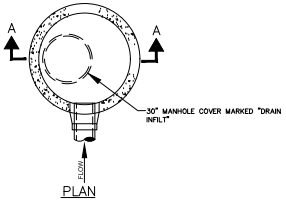

PLAN

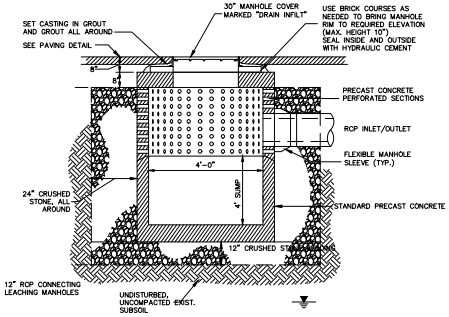

SECTION (TYP)

SCALE: N.T.S.

LEACHING MANHOLE INFILTRATION BASIN DETAIL

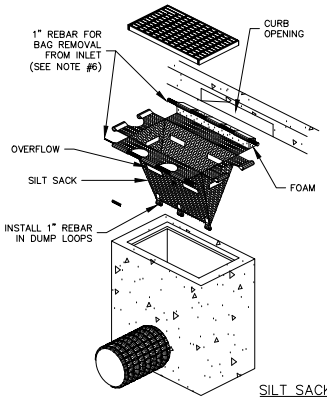

NOTES FOR EROSION CONTROL:

1. CONTRACTOR SHALL REMOVE SEDIMENT AS NECESSARY TO MAINTAIN LEVEL BELOW OVERFLOW HOLES IN SILT SACK.
2. SILT SACK SHALL BE USED ON ALL CATCH BASINS WITHIN CONSTRUCTION ZONE OR AS DIRECTED BY THE ENGINEER.
3. CONTRACTOR IS RESPONSIBLE FOR MAINTAINING SEDIMENTATION BARRIERS THROUGHOUT THE DURATION OF THE PROJECT.
4. CONTRACTOR SHALL REMOVE AND LEGALLY DISPOSE OF SEDIMENT AS REQUIRED.
5. CONTRACTOR SHALL REMOVE SILT SACKS AND LEGALL DISPOSE OF THEM OFF-SITE, UPON COMPLETION OF THE PROJECT AND AS REQUIRED.
6. 1" REBAR FOR BAG REMOVAL SHALL BE REMOVED DURING WINTER MONTHS AT LOCATIONS WHERE PLOW ACTIVITY IS. BARS SHALL BE REINSTALLED AFTER SNOW SEASON IS COMPLETE.

SILT SACK (TYP.)

SCALE: N.T.S.

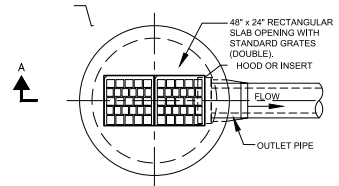

PLAN

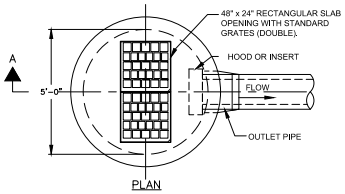

PLAN

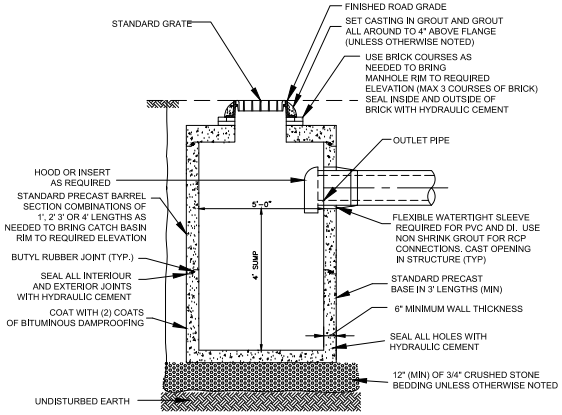

SECTION A–A

DOUBLE GRATE CATCH BASIN

SCALE: N.T.S.

KLEINFELDER
Bright People. Right Solutions.

BRIAN J. MONTEIRO CIVIL No. 47347
12/23/2020

No.	Description	Date
	REVISIONS	

Scale: AS NOTED
Date: DEC 2020
Job No.: 20202506.001A
Designed by: CD
Drawn by: CD
Checked by: NB
Approved by: NB

Client: TOWN OF HULL, MASSACHUSETTS
Project: NORTH NANTASKET BEACH DUNE RESTORATION AND ACCESSIBILITY
Drawing: CIVIL DETAILS
Sheet: C.05

STRUCTURAL GENERAL NOTES

1. THE STRUCTURAL DRAWINGS SHALL BE USED IN CONJUNCTION WITH ALL OTHER CONTRACT DRAWINGS AND SPECIFICATIONS. REFER TO PROCESS EQUIPMENT, ARCHITECTURAL, CIVIL MECHANICAL, HVAC, PLUMBING, ELECTRICAL, AND FIRE PROTECTION DRAWINGS FOR LOCATIONS, DIMENSIONS, AND DETAILS OF OPENINGS, SLEEVES, EMBEDMENTS, AND EQUIPMENT INSERTS, PADS, CURBS, DEPRESSIONS, ANCHOR BOLTS, EXTERIOR GRADING AND OTHER PROJECT REQUIREMENTS NOT SHOWN ON STRUCTURAL DRAWINGS.

2. THE CONTRACTOR SHALL OBTAIN HISTORICAL DRAWINGS, REPORTS, AND SPECIFICATIONS OF THE EXISTING STRUCTURES CONSTRUCTION FROM THE OWNER. THE CONTRACTOR IS RESPONSIBLE FOR VERIFYING IN THE FIELD THE ACCURACY OF ALL RELEVANT INFORMATION SHOWN ON THE HISTORIC DRAWINGS, INCLUDING BUT NOT LIMITED TO STRUCTURAL SUBSTRUCTURE AND SUPERSTRUCTURE CONDITIONS AND THE EXISTENCE OF OVERHEAD, BURIED AND/OR EMBEDDED UTILITIES. THE CONTRACTOR SHALL FIELD VERIFY EXISTING CONDITIONS, ELEVATIONS AND DIMENSIONS PRIOR TO FABRICATING NEW WORK THAT WILL BE CONNECTED TO EXISTING CONSTRUCTION.

3. VERIFYING AND COORDINATE ALL DIMENSIONS AND ELEVATIONS RELATING TO EXISTING CONDITIONS.

4. CODES AND STANDARDS
- "THE MASSACHUSETTS STATE BUILDING CODE" – 780 CMR, NINTH EDITION
- INTERNATIONAL BUILDING CODE 2015
- MASSACHUSETTS AMENDMENTS TO THE IBC AND IEBC
- "BUILDING CODE REQUIREMENTS FOR REINFORCED CONCRETE", AMERICAN CONCRETE INSTITUTE ACI 318-14
- "MINIMUM DESIGN LOADS FOR BUILDINGS AND OTHER STRUCTURES" – AMERICAN SOCIETY OF CIVIL ENGINEERS, ASCE 7-10
- SAFETY AND HEALTH REGULATIONS FOR CONSTRUCTION" OSHA CFR PART 1926
- NATIONAL DESIGN SPECIFICATION FOR WOOD CONSTRUCTION 2015
- "TIMBER CONSTRUCTION MANUAL", AMERICAN INSTITUTE OF TIMBER CONSTRUCTION
- "TIMBER PILE DESIGN AND CONSTRUCTION MANUAL", TIMBER PILE COUNCIL, AMERICAN WOODS PRESERVERS INSTITUTE

5. THE CONTRACTOR, OR HIS REPRESENTATIVE, CAN PROPOSE TO THE ENGINEER DESIGNS FOR THE FOLLOWING PERMANENT ELEMENTS SUBJECT TO APPROVAL BY THE ENGINEER AND THE CLIENT:
- HANDRAILS AND HANDRAIL CONNECTIONS TO STRUCTURAL MEMBERS
- TIMBER CURBS AND CURB CONNECTIONS TO STRUCTURAL MEMBERS
- DECKING FASTENING TO STRUCTURAL MEMBERS

FOR PERFORMANCE DESIGN REQUIREMENTS OF ELEMENTS LISTED ABOVE, REFER TO ADDITIONAL NOTES THESE SHEETS AND TECHNICAL SPECIFICATIONS.

ALL DESIGNS SHALL BE PERFORMED BY A PROFESSIONAL STRUCTURAL ENGINEER, LICENSED IN MASSACHUSETTS. SUBMITTAL DRAWINGS AND CALCULATIONS SHALL BE SIGNED AND SEALED BY THE ENGINEER.

6. TYPICAL DETAILS AND NOTES SHOWN ON STRUCTURAL DRAWINGS SHALL BE APPLICABLE TO ALL PARTS OF THE STRUCTURAL WORK EXCEPT WHERE SPECIFICALLY REQUIRED OTHERWISE BY CONTRACT DOCUMENTS.

7. STRUCTURAL WORK SHALL BE INSPECTED AND TESTED BY IN CONFORMANCE WITH 780 CMR AND IBC 2015. REQUIREMENTS FOR TESTING AND INSPECTION ARE PROVIDED IN THE TECHNICAL SPECIFICATIONS.

8. ELEVATIONS SHOWN REFER TO THE NORTH AMERICAN VERTICAL DATUM OF 1988.

9. THE STRUCTURE IS DESIGNED TO ACT AS A STRUCTURAL UNIT UPON COMPLETION. THE CONTRACTOR SHALL DESIGN AND PROVIDE ALL REQUIRED SHORING AND TEMPORARY BRACING TO RESIST FORCES ON THE STRUCTURES THROUGHOUT THE CONSTRUCTION PERIOD.

10. THE CONTRACTOR SHALL FIELD VERIFY EXISTING CONDITIONS, ELEVATIONS AND DIMENSIONS PRIOR TO FABRICATING NEW WORK THAT WILL BE CONNECTED TO EXISTING CONSTRUCTION.

STRUCTURAL TIMBER

1. TIMBER SIZES INDICATED ON PLANS ARE NOMINAL UNLESS NOTED OTHERWISE. ACTUAL DIMENSIONS PER DOC PS-20 ARE SUMMARIZED AS FOLLOWS:

LUMBER DIMENSIONS: NOMINAL vs. ACTUAL	
NOMINAL (IN.)	ACTUAL (IN.)
1	3/4
2	1 1/2
3	2 1/2
4	3 1/2
6	5 1/2
8	7 1/4
10	9 1/4
12	11 1/4

2. FOR ADDITIONAL INFORMATION AND REQUIREMENTS, REFER TO TIMBER SPECIFICATIONS 06100, 06130, AND TIMBER PILE SPECIFICATION 02370.

STRUCTURAL STEEL

1. DESIGN, FABRICATION, AND ERECTION OF STRUCTURAL STEEL SHALL CONFORM TO THE AISC "STEEL CONSTRUCTION MANUAL", 14TH EDITION, AND 29 CFR PART 1926 SUBPART R – "SAFETY STANDARDS FOR STEEL ERECTION".

2. STRUCTURAL STEEL SHALL BE NEW STEEL CONFORMING TO THE FOLLOWING:
(A) PLATES, BARS, ANGLES, AND CHANNELS..... AISI 316 S.S., U.N.O.
(B) HIGH STRENGTH BOLTS..... AISI 316 S.S.
(C) ANCHOR BOLTS AND RODS..... AISI 316 S.S., U.N.O.

3. ANCHOR RODS, ANCHOR BOLTS, LEVELING PLATES, OR BEARING PLATES SHALL BE LOCATED AND BUILT INTO CONNECTING WORK, PRESET BY TEMPLATES OR SIMILAR METHODS. PLATES SHALL BE SET IN FULL BEDS OF NON-SHRINK GROUT.

4. BOLTED CONNECTIONS SHALL BE AS FOLLOWS:
(A) MINIMUM BOLT DIAMETER – 5/8".
(B) SHEAR CONNECTIONS FOR OTHER MEMBERS – PRETENSION TYPE HIGH STRENGTH BOLTS, UNLESS NOTED OTHERWISE. (D) MINIMUM CONNECTION CAPACITY SHALL BE 6 KIPS, UNLESS NOTED OTHERWISE.

5. COMPLY WITH OSHA SAFETY AND HEALTH STANDARDS FOR THE CONSTRUCTION INDUSTRY: 29 CFR PART 1926 SUBPART R – SAFETY STANDARDS FOR STEEL ERECTION.

CAST IN PLACE CONCRETE

1. UNLESS OTHERWISE NOTED, CONCRETE SHALL BE NORMAL WEIGHT, CAST-IN-PLACE CONCRETE WITH ASTM C150, TYPE V CEMENT AND HAVE A SPECIFIED COMPRESSIVE STRENGTH AS FOLLOWS:
- CLASS B, 4000 PSI - SPECIFIED 28 DAYS COMPRESSIVE STRENGTH FOR ALL CONCRETE WORK AND HAVE A MAXIMUM WATER-CEMENT RATIO OF 0.42 UNLESS OTHERWISE INDICATED OR SPECIFIED.
- CLASS G, 1500 PSI - FOR MUD SLAB AS SHOWN IN DRAWINGS

2. AIR-ENTRAIN ALL CONCRETE, EXCEPT FOR INTERIOR SLABS AND SLABS-ON-GRADE.

3. ALL PERMANENTLY EXPOSED VERTICAL AND HORIZONTAL CONCRETE SURFACES SHALL BE TREATED OR SEALED IN ACCORDANCE WITH PROJECT SPECIFICATIONS AND CONCRETE FINISH REQUIREMENTS NOTES.

4. CONCRETE WORK SHALL BE COORDINATED WITH ALL CIVIL WORK AND DRAWINGS S.01 TO S.04. THE CONTRACTOR SHALL VERIFY INSTALLATION AND LOCATIONS OF ALL EMBEDDED ITEMS INCLUDING BUT NOT LIMITED TO INSERTS, ANCHOR BOLTS, ACHOR RODS, DOWELS, BLOCKOUTS, SLEEVES, EMBEDDED PIPING, AND EMBEDDED CONDUIT PRIOR TO CONCRETE PLACEMENT.

5. A MINIMUM OF 72 HOURS SHALL ELAPSE BETWEEN ADJACENT CONCRETE PLACEMENTS.

6. CONCRETE SLABS SHALL BE PLACED SO THAT THE SLAB THICKNESS IS AT NO POINT LESS THAN THAT INDICATED ON THE DRAWINGS.

7. PROVIDE 3/4" x 3/4" CHAMFER ON ALL EXPOSED VERTICAL AND HORIZONTAL OUTSIDE CORNERS UNLESS OTHERWISE NOTED.

8. PLACE SLABS AND BEAMS MONOLITHICALLY UNLESS OTHERWISE INDICATED.

9. NO ALUMINUM CONDUIT OR PRODUCTS CONTAINING ALUMINUM OR ANY OTHER MATERIAL INJURIOUS TO THE CONCRETE SHALL BE EMBEDDED IN THE CONCRETE.

CAST IN PLACE CONCRETE REINFORCEMENT

1. REINFORCEMENT WORK OF DETAILING, FABRICATION, AND ERECTION SHALL CONFORM TO "ACI DETAILING MANUAL" – SP-66, "CRSI MANUAL OF STANDARD PRACTICE", AND "STRUCTURAL WELDING CODE – REINFORCING STEEL" – AWS D1.4.

2. STEEL REINFORCEMENT, UNLESS OTHERWISE NOTED, SHALL CONFORM TO THE FOLLOWING:
(A) BARS, TIES, AND STIRRUPS..... ASTM A615, GRADE 60
(B) WELDED WIRE FABRIC..... ASTM A185 FLAT SHEETS
(C) BARS DETAILED WITH WELDED CONNECTIONS..... ASTM A706, GRADE 60

3. REINFORCING STEEL SHALL GENERALLY BE UNCOATED AND DEFORMED UNLESS NOTED OTHERWISE. EPOXY COATED BARS, WHERE INDICATED ON THE DRAWINGS AND/OR IN THE SPECIFICATIONS, SHALL ALSO CONFORM TO ASTM A775.

4. MINIMUM CONCRETE PROTECTIVE COVERING FOR REINFORCEMENT, UNLESS NOTED OTHERWISE, SHALL BE AS FOLLOWS:
(A) SURFACES CAST AGAINST AND PERMANENTLY IN CONTACT WITH EARTH..... 3.0"
(B) FORMED SURFACES BACKFILLED WITH EARTH OR EXPOSED TO WEATHER..... 2.0"

5. REINFORCING STEEL SHALL BE CONTINUOUS THROUGH ALL CONSTRUCTION JOINTS, CORNERS, AND INTERSECTIONS UNLESS OTHERWISE NOTED. REINFORCING STEEL SHALL NOT BE CONTINUOUS THROUGH SLAB ON GRADE CONTROL JOINTS. REINFORCING SHALL BE LAPPED AT NECESSARY SPLICES OR HOOKED AT DISCONTINUOUS ENDS WITH ACI STANDARD HOOKS, UNLESS OTHERWISE NOTED.

STANDARD HOOKS SHALL COMPLY WITH ACI 318 REQUIREMENTS FOR DEVELOPMENT OF STANDARD HOOKS IN TENSION. REFER TO TYPICAL DETAILS.

6. LAP CONTINUOUS BOTTOM REINFORCEMENT AT THE SUPPORTS AND CONTINOUS TOP REINFORCEMENT AT THE CENTER OF A SPAN IN ELEVATED SLABS AND BEAMS, UNLESS OTHERWISE INDICATED.

7. LAP CONTINUOUS BOTTOM REINFORCEMENT AT THE CENTER OF SPAN AND CONTINOUS TOP REINFORCEMENT AT SUPPORTS IN FOUNDATION MATS AND BASE SLABS, UNLESS OTHERWISE INDICATED.

8. PROVIDE REINFORCING BAR SUPPORTS, SPACERS, AND ACCESSORIES AS RECOMMENDED IN ACI 315. PROVIDE PLASTIC BOOTED ACCESSORIES IN CONTACT WITH EXPOSED SURFACES. PROVIDE MINIMUM #5 SUPPORT BARS.

9. PROVIDE ADDITIONAL REINFORCEMENT ALONG EACH SIDE OF OPENINGS AS INDICATED IN THE STANDARD DETAILS UNLESS OTHERWISE INDICATED.

10. MECHANICAL SPLICES SHALL BE PERMITTED SUBJECT TO APPROVAL BY THE ENGINEER. MECHANICAL SPLICES SHALL DEVELOP AT LEAST 125 PERCENT OF THE SPECIFIED YIELD STRENGTH OF THE BAR.

11. ADHESIVE ANCHORING SYSTEMS FOR DRILLED-IN REINFORCING BARS SHALL BE PERMITTED SUBJECT TO APPROVAL BY THE ENGINEER. THE ANCHORING SYSTEM SHALL BE DESIGNED BY A LICENSED PROFESSIONAL STRUCTURAL ENGINEER REGISTERED IN MASSACHUSETTS. THE ANCHORING SYSTEM SHALL CONFORM TO THE REQUIREMENTS OF ICC-ES AC308 AND BE DESIGNED ACCORDING TO THE METHODS OUTLINED THEREIN AND BE CAPABLE OF DEVELOPING THE FULL YIELD STRENGTH OF THE BAR BASED ON THE RESULTS OF UNCONFINED PULL-OUT TESTING.

12. DOWELS SHALL MATCH BAR SIZE AND NUMBER, UNLESS NOTED OTHERWISE.

13. INSTALLATION OF REINFORCEMENT SHALL BE AVAILABLE FOR INSPECTION PRIOR TO THE SCHEDULED CONCRETE PLACEMENT.

DRILLED-IN ANCHORS, AND ADHESIVES

1. AS INDICATED ON DRAWINGS S.01 TO S.04, PROVIDE STAINLESS STEEL ANCHORS CONFORMING TO ASTM F593. STAINLESS STEEL ANCHORS SHALL BE AISI TYPE 316 STAINLESS STEEL PROVIDED WITH STAINLESS STEEL NUTS AND WASHERS OF MATCHING ALLOY GROUP AND MINIMUM PROOF STRESS EQUAL TO OR GREATER THAN THE SPECIFIED FULL-SIZE TENSILE STRENGTH OF THE EXTERNALLY THREADED FASTENER. STAINLESS STEEL NUTS SHALL CONFORM TO ASTM F594 UNLESS OTHERWISE SPECIFIED. AVOID INSTALLING STAINLESS STEEL ANCHORS IN CONTACT WITH GALVANICALLY DISSIMILAR METALS.

2. FOR EXTERIOR EXPOSURE, THE THREADED INSERT SHALL BE STAINLESS STEEL. ADHESIVES SHALL BE A CARTRIDGE TYPE, TWO-COMPONENT, HIGH SOLIDS EPOXY-BASED SYSTEM DISPENSED AND MIXED THROUGH A STATIC MIXING NOZZLE SUPPLIED BY THE MANUFACTURER. THE ADHESIVE SHALL MEET THE MINIMUM REQUIREMENTS OF ASTM C-991 TYPE I AND IV, GRADE 3, CLASS C. ACCEPTABLE INSTALLATION AND PERFORMANCE TEMPERATURE RANGES SHALL BE VERIFIED WITH MANUFACTURER'S LITERATURE PRIOR TO INSTALLATION. EPOXY ADHESIVES SHALL HAVE AN EVALUATION REPORT ISSUED BY ICC-ES AND HAVE BEEN TESTED AND QUALIFIED FOR USE IN UNCRACKED CONCRETE.

3. SUBJECT TO COMPLIANCE WITH REQUIREMENTS, MANUFACTURERS OFFERING PRODUCTS THAT MAY BE INCORPORATED INTO THE WORK INCLUDE, BUT ARE NOT LIMITED TO THE FOLLOWING:
(A) HILTI HIT-RE 500 V3 EPOXY ADHESIVE ANCHORING SYSTEM

FOUNDATIONS

1. NO RESPONSIBILITY IS ASSUMED BY THE ENGINEER FOR THE VALIDITY OF THE SUBSURFACE CONDITIONS DESCRIBED IN THE DRAWINGS, SPECIFICATIONS, TEST BORINGS OR TEST PITS. THESE DATA ARE INCLUDED ONLY TO ASSIST THE CONTRACTOR DURING BIDDING AND SUBSEQUENT CONSTRUCTION AND REPRESENT CONDITIONS ONLY AT THESE SPECIFIC LOCATIONS AT THE PARTICULAR TIME THEY WERE MADE.

2. RAMP STRUCTURE AS DETAILED ON THESE DRAWINGS IS SUPPORTED BY TIMBER PILES.

3. TIMBER PILES SHALL BE CENTERED UNDER SUPPORTED STRUCTURAL MEMBERS, UNLESS NOTED OTHERWISE ON THE DRAWINGS.

4. CARRY OUT CONTINUOUS CONTROL OF SURFACE AND SUBSURFACE WATER DURING CONSTRUCTION SUCH THAT FOUNDATION WORK IS DONE IN THE DRY AND ON UNDISTURBED SUBGRADE MATERIAL. NO FOUNDATION CONCRETE SHALL BE PLACED IN WATER OR ON FROZEN SUBGRADE MATERIAL.

5. FOR ADDITIONAL INFORMATION AND REQUIREMENTS, REFER TO EARTHWORK SPECIFICATIONS 02100 AND 02210.

6. THE CONTRACTOR SHALL PLACE BACKFILL UNIFORMLY AROUND STRUCTURES TO PREVENT TEMPORARY UNBALANCED LOADING UNLESS OTHERWISE NOTED ON THE DRAWINGS.

7. PERCENT COMPACTION IS DEFINED AS THE RATIO OF THE FIELD DRY DENSITY, DETERMINED BY ASTM D-1556, TO THE MAXIMUM DRY DENSITY, DETERMINED BY ASTM-D 1557 (MODIFIED PROCTOR).

8. COMPACT BACKFILL UNDER GRADE BEAMS, CONCRETE PADS, AND SLABS ON GRADE TO A MINIMUM OF 95 PERCENT. COMPACT EMBANKAMENTS AND BACKFILL NOT SUPPORTING STRUCTURES TO A MINIMUM OF 90 PERCENT. PLACE AND COMPACT BACKFILL IN 8-INCH MAXIMUM LAYERS.

9. COMPACT THE BOTTOM SURFACE OF EXPOSED EXCAVATIONS WITH VIBRATORY STEEL DRUM ROLLER OR VIBRATORY PLATE TO ACHIEVE A NEAR SURFACE DENSITY OF AT LEAST 95 PERCENT.

10. PROVIDE FOUNDATION PREPARATION AS INDICATED UNDER ALL GRADE BEAMS, CONCRETE PADS, AND SLABS ON GRADE.

11. A UNIT WEIGHT OF SOIL OF 120 PCF WAS USED IN THE DESIGN.

GENERAL DESIGN LOADS

1. BUILDING

(A) RISK CATEGORY I

(B) DEAD LOADS
(1) WEIGHT OF BUILDING COMPONENTS AS NOTED ON DRAWINGS

(C) LIVE LOADS
UNIFORM LOADS
STAIRS, WALKWAYS..... 100 PSF

(D) SNOW LOADS
(1) GROUND SNOW LOAD (PG)..... 35 PSF
(2) FLAT ROOF SNOW LOAD (PF)..... 22 PSF
(3) EXPOSURE FACTOR (CE)..... 0.9
(4) IMPORTANCE FACTOR (I)..... 0.8
(5) THERMAL FACTOR (CT)..... 1.2

(E) HYDRAULIC LOADS
(1) WAVE IMPACT LOAD..... 750 LB

LEGEND OF ABBREVIATIONS

Ø	DIAMETER
BOT.	BOTTOM
CL.	CENTER LINE
CLR.	CLEAR
COL.	COLUMN / COLUMN LINE
CONC.	CONCRETE
DIA.	DIAMETER
EA.	EACH
EL.	ELEVATION
E.W.	EACH WAY
HORZ.	HORIZONTAL
JT.	JOINT
L	LENGTH
MAX.	MAXIMUM
MIN.	MINIMUM
O.C.	ON CENTER
S.S.	STAINLESS STEEL
TBP	TIMBER BASE PLATE
TYP.	TYPICAL
VERT.	VERTICAL

KLEINFELDER
Bright People. Right Solutions.

No.	Description	Date
	REVISIONS	

Scale: AS NOTED
Date: DEC 11, 2020
Job No.: 20202508.002A
Designed by: M. LORTIE
Drawn by: J. COLAMETA
Checked by: C. SACHE
Approved by: -

Client: TOWN OF HULL, MA
Project: NORTH NANTASKET BEACH DUNE RESTORATION AND ACCESSIBILITY
Drawing: STRUCTURAL NOTES

Sheet S.01 OF

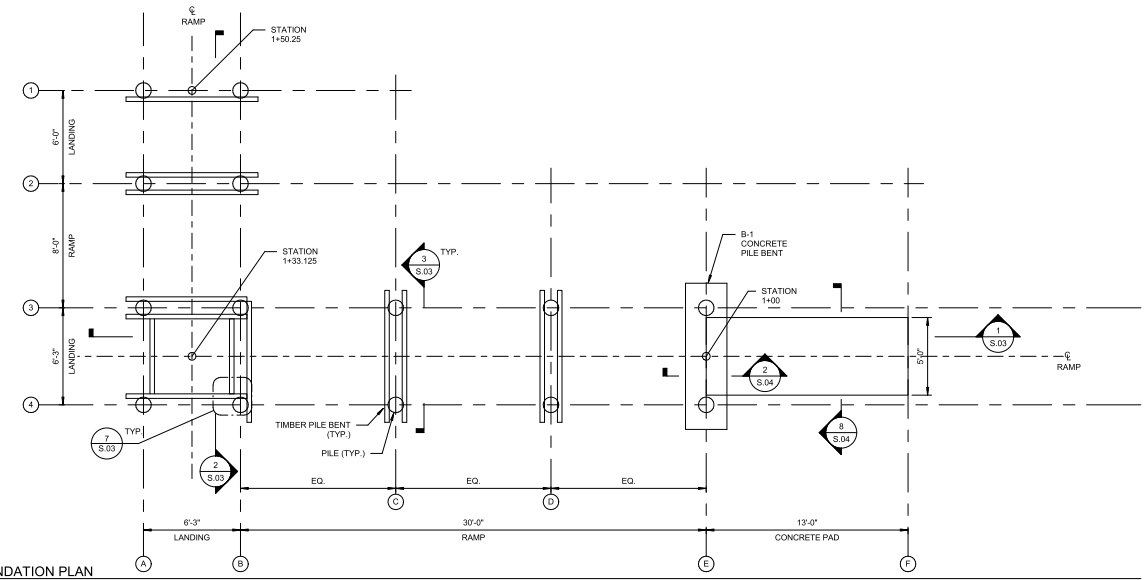

1 FOUNDATION PLAN
SCALE: 1/4" = 1'-0"

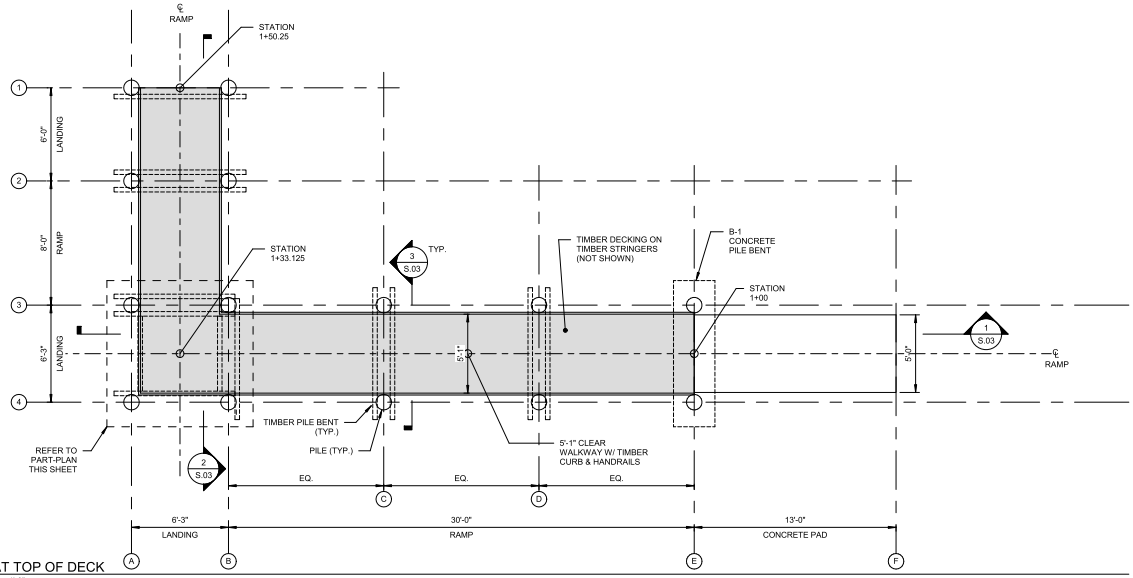

2 PLAN AT TOP OF DECK
SCALE: 1/4" = 1'-0"

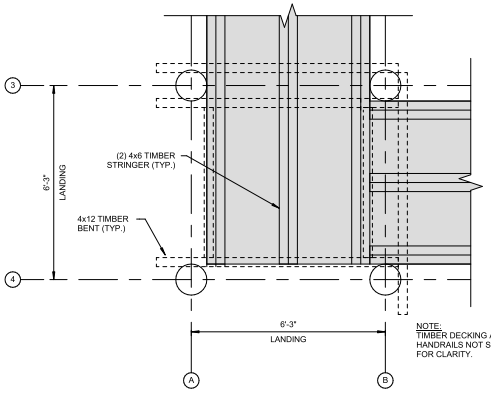

NOTE:
TIMBER DECKING AND HANDRAILS NOT SHOWN FOR CLARITY.

3 PART-PLAN LANDING AT CORNER
SCALE: 1/2" = 1'-0"

NOTES:

1. SEE GENERAL NOTES ON SHEET S.01.
2. ALL TIMBER SIZES INDICATED ON PLANS ARE NOMINAL. REFER TO TABLE ON S0.1 FOR ACTUAL SIZE.
3. ALL BOLTS AND CONNECTIONS ARE STAINLESS STEEL TYPE 316.

KLEINFELDER
Bright People. Right Solutions.

No.	Description	Date
	REVISIONS	

Scale	AS NOTED
Date	DEC 11, 2020
Job No.	20202509.002A
Designed by	M. LORTIE
Drawn by	J. COLAMETA
Checked by	C. SACHE
Approved by	-

Client: TOWN OF HULL, MA

Project: NORTH NANTASKET BEACH DUNE RESTORATION AND ACCESSIBILITY

Drawing: RAMP PLAN

Sheet S.02 OF

C:\Users\MLortie\OneDrive - Kleinfelder\Documents\Struct_North Nantasket Beach_Pedestrian Ramp_Central_mlortieHBB5.rvt

12/21/2020 11:01:06 AM

KLEINFELDER -

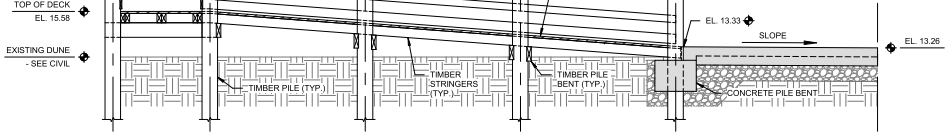

1 S.02 STREET SIDE RAMP ELEVATION
SCALE: 1/4" = 1'-0"

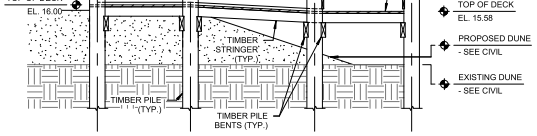

2 S.02 BEACH SIDE RAMP ELEVATION
SCALE: 1/4" = 1'-0"

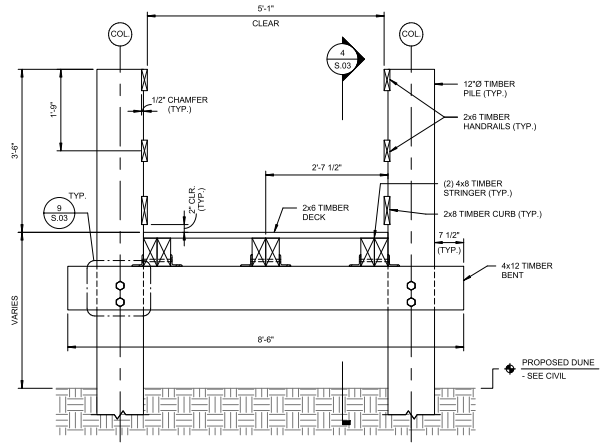

3 S.02 CROSS SECTION
SCALE: 3/4" = 1'-0"

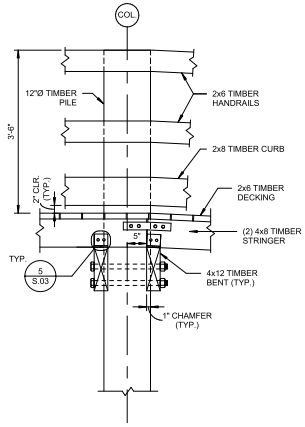

4 S.03 SECTION
SCALE: 3/4" = 1'-0"

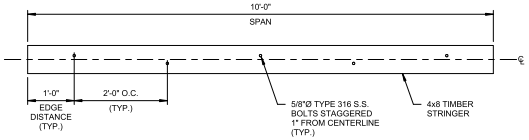

6 TIMBER STRINGER SISTERING LAYOUT DETAIL
SCALE: 3/4" = 1'-0"

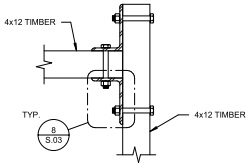

7 S.02 TIMBER BENT TO TIMBER BENT CONNECTION DETAIL
SCALE: 1 1/2" = 1'-0"

TIMBER PILE SCHEDULE	
PILE (COL LINE)	MIN. PILE TIP ELEVATION
A-1	-1.00
B-1	-1.00
A-2	-1.00
B-2	-1.00
A-3	-4.00
B-3	-4.00
C-3	-4.00
D-3	-4.00
E-3	-4.00
A-4	-5.00
B-4	-5.00
C-4	-5.00
D-4	-5.00
E-4	-5.00

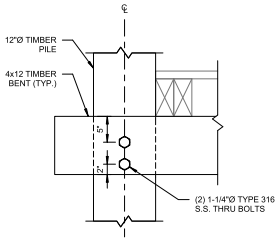

9 S.03 TIMBER PILE TO TIMBER BENT CONNECTION DETAIL
SCALE: 1" = 1'-0"

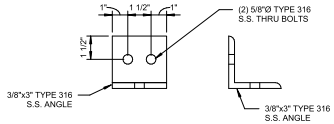

5 S.03 L3x3 BENT ANGLE DETAIL
SCALE: 3" = 1'-0"

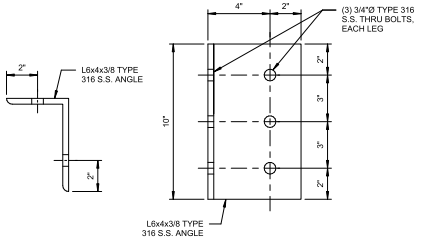

8 S.03 L6x4 BENT ANGLE DETAIL
SCALE: 3" = 1'-0"

NOTES:

1. SEE GENERAL NOTES ON SHEET S.01.
2. ALL TIMBER SIZES INDICATED ON PLANS ARE NOMINAL. REFER TO TABLE ON S0.1 FOR ACTUAL SIZE.
3. ALL BOLTS AND CONNECTIONS ARE STAINLESS STEEL TYPE 316.

KLEINFELDER
Bright People. Right Solutions.

No.	Description	Date
-	REVISIONS	

Scale	AS NOTED
Date	DEC 11, 2020
Job No.	20202506.002A
Designed by	M. LORTIE
Drawn by	J. COLAMETA
Checked by	C. SACHE
Approved by	-

Client: TOWN OF HULL, MA

Project: NORTH NANTASKET BEACH DUNE RESTORATION AND ACCESSIBILITY

Drawing: RAMP ELEVATIONS, SECTIONS & DETAILS

Sheet S.03 OF

C:\Users\MLortie\OneDrive - Kleinfelder\Documents\Struct_North Nantasket Beach_Pedestrian Ramp_Central_mlortieHSB5.rvt

12/21/2020 11:01:07 AM

KLEINFELDER -

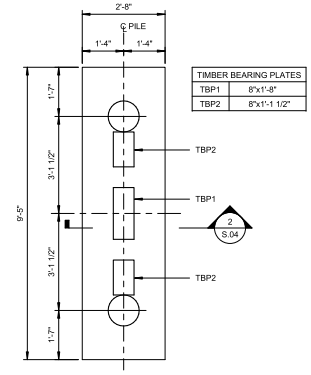

TIMBER BEARING PLATES	
TBP1	8"x1'-8"
TBP2	8"x1'-1 1/2"

1 B1 CONCRETE PILE BENT PLAN DETAIL
SCALE: 1/2" = 1'-0"

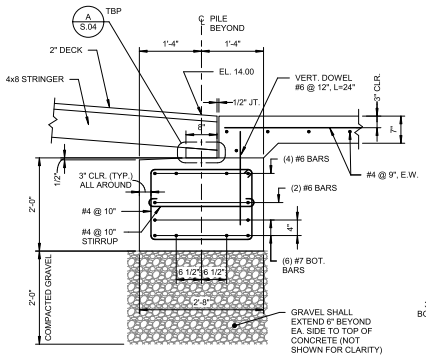

2 S.02 SECTION AT CENTER OF BENT B1
SCALE: 3/4" = 1'-0"

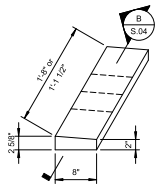

A S.04 TBP DETAIL
SCALE: 1" = 1'-0"

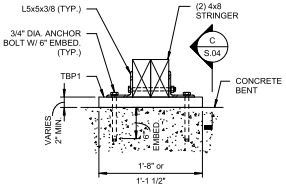

B S.04 TBP SECTION
SCALE: 1" = 1'-0"

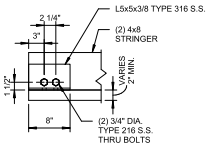

C S.04 L5x5 ANGLE DETAIL
SCALE: 1" = 1'-0"

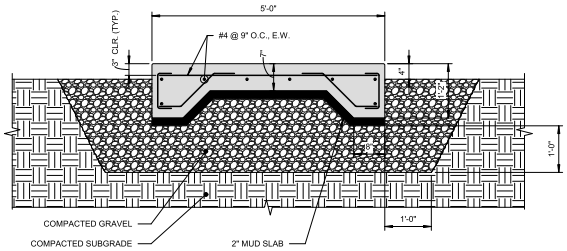

8 S.02 CONCRETE PAD CROSS SECTION
SCALE: 3/4" = 1'-0"

NOTES:

1. SEE GENERAL NOTES ON SHEET S.01.
2. ALL TIMBER SIZES INDICATED ON PLANS ARE NOMINAL. REFER TO TABLE ON S0.1 FOR ACTUAL SIZE.
3. ALL BOLTS AND CONNECTIONS ARE STAINLESS STEEL TYPE 316.

KLEINFELDER
Bright People. Right Solutions.

No.	Description	Date
	REVISIONS	

Scale	AS NOTED
Date	DEC 11, 2020
Job No.	20202506.002A
Designed by	M. LORTIE
Drawn by	J. COLAMETA
Checked by	C. SACHE
Approved by	-

Client: TOWN OF HULL, MA
Project: NORTH NANTASKET BEACH DUNE RESTORATION AND ACCESSIBILITY
Drawing: SECTIONS & DETAILS

Sheet S.04 OF

C:\Users\MLortie\OneDrive - Kleinfelder\Documents\Struct_North Nantasket Beach_Pedestrian Ramp_Central_mlortieHSB5.rvt

12/21/2020 11:01:09 AM

KLEINFELDER -