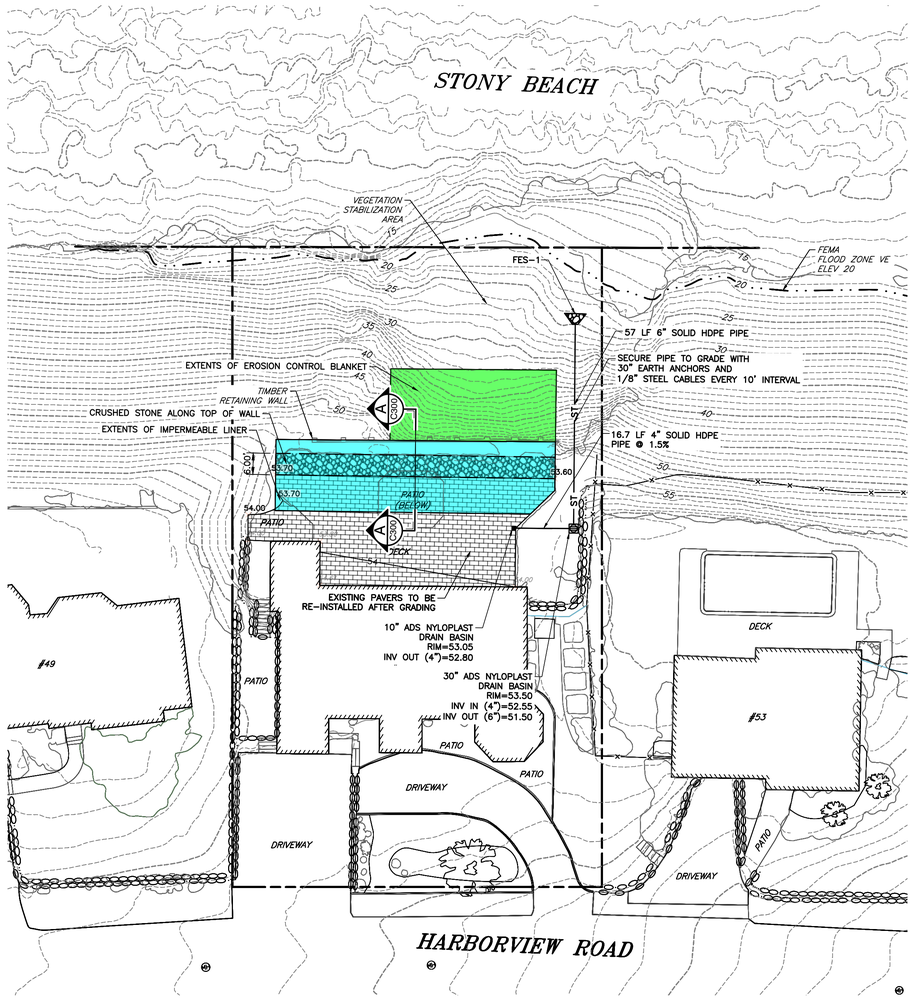

LEGEND

	EXISTING SUBJECT PROPERTY LINE
	EXISTING EASEMENT
	EXISTING RIGHT-OF-WAY
100	EXISTING INDEX (MAJOR) CONTOUR
99	EXISTING INTERMEDIATE (MINOR) CONTOUR
	EXISTING FENCE LINE
	EXISTING STRUCTURE
ST	PROPOSED STORM PIPE
	PROPOSED CATCH BASIN
380	PROPOSED INDEX (MAJOR) CONTOUR
381	PROPOSED INTERMEDIATE (MINOR) CONTOUR
595.68 ×	PROPOSED SPOT ELEVATION

FES NO.	X	Y	Z	STONE DIA. (D50)
FES 1	4'	6'	6"	3"

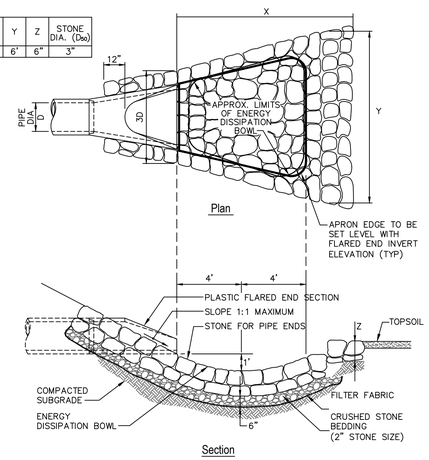

FLARED END SECTION WITH STONE PROTECTION

N.T.S.

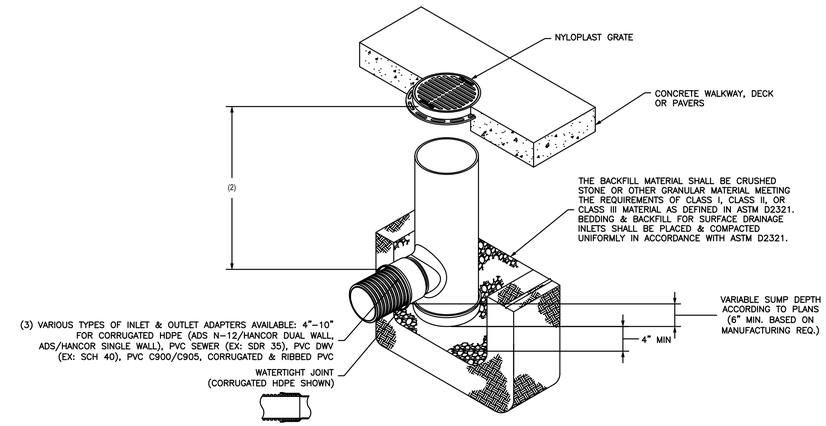

1 – CUSTOM DRAIN BASIN TO BE CUSTOM MANUFACTURED ACCORDING TO PLAN RESTRICTIONS. SEE DRAWING NO. 7001-110-065.

2 – STANDARD DRAIN BASIN HAS FIXED ADAPTER LOCATIONS OF 0 & 180 DEGREES CUSTOM DRAIN BASIN ADAPTERS CAN BE MOUNTED ON ANY ANGLE 0 TO 360 DEGREES TO DETERMINE MINIMUM ANGLE BETWEEN ADAPTERS SEE DRAWING NO. 7001-110-012.

3 – DRAINAGE CONNECTION STUB JOINT TIGHTNESS SHALL CONFORM TO ASTM D3213 FOR CORRUGATE HDPE (ADS N-12/HANCOR DUAL WALL) & PVC SEWER (4"-10").

10" ADS NYLOPLAST DRAIN BASIN W/ GRATE

N.T.S.

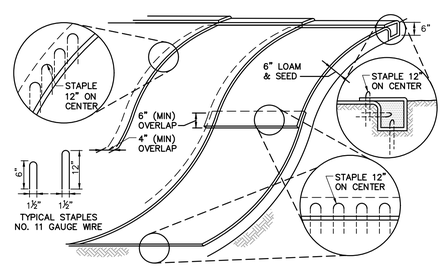

NOTES:

1. BEGIN AT THE TOP OF BLANKET INSTALLATION AREA BY ANCHORING BLANKET IN A SIX (6) INCH DEEP TRENCH. BACKFILL AND COMPACT TRENCH AFTER STAPLING.
2. ROLL THE BLANKET DOWN THE SLOPE IN THE DIRECTION OF THE WATER FLOW.
3. THE EDGES OF BLANKETS MUST BE STAPLED WITH APPROXIMATELY FOUR (4) INCH OVERLAP WHERE TWO (2) OR MORE STRIP WIDTHS ARE REQUIRED.
4. WHEN BLANKETS MUST BE SPLICED DOWN THE SWALE, PLACE UPPER BLANKET END OVER LOWER END WITH SIX (6) INCH MINIMUM OVERLAP AND STAPLE BOTH TOGETHER.
5. MORE FASTENERS MAY BE REQUIRED DUE TO BLANKET COMPOSITION, SOIL TYPE, SURFACE UNIFORMITY AND SLOPE STEEPNESS. METHOD OF INSTALLATION SHALL BE AS PER MANUFACTURER'S RECOMMENDATIONS.
6. TO BE PLACED ON SLOPES 3:1 OR GREATER, AS SHOWN ON PLANS.

EROSION CONTROL BLANKET ON SLOPE

N.T.S.

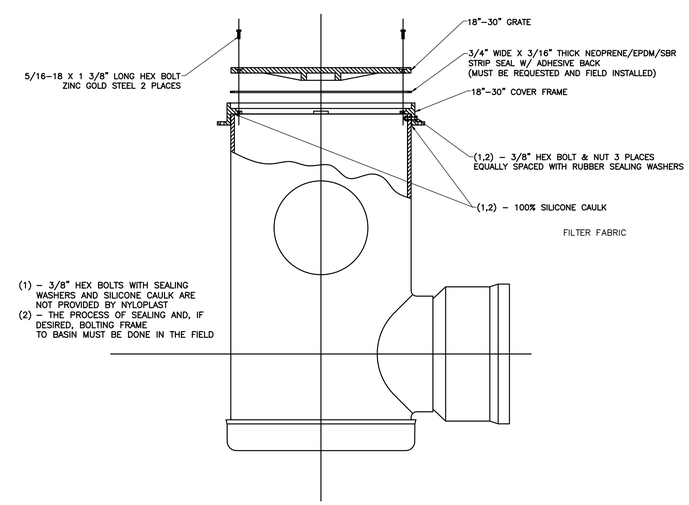

30" ADS NYLOPLAST DRAIN BASIN W/ GRATE

N.T.S.

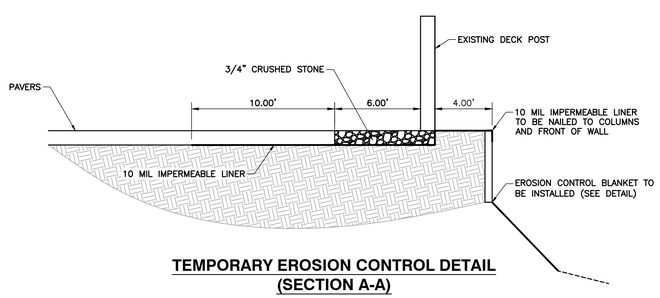

TEMPORARY EROSION CONTROL DETAIL (SECTION A-A)

N.T.S.

SCALE IN FEET
0 20 40

REVISION RECORD

NO	DATE	DESCRIPTION

Civil & Environmental Consultants, Inc.
31 Bellows Road · Raynham, MA 02767
Ph: 774.501.2176 · 866.312.2024 · Fax: 774.501.2669
www.cecinc.com

THOMAS P. FITZGERALD
51 HARBORVIEW ROAD
HULL, MA 02045

GRADING AND DRAINAGE PLAN

DATE:	AUGUST 2023	DRAWN BY:	KLP
DWG SCALE:	1"=20'	CHECKED BY:	AES
PROJECT NO:		324-891	
APPROVED BY:			AES

COMMONWEALTH OF MASSACHUSETTS ANTONIO E. SOUSA JR. CIVIL No. 45359 REGISTERED PROFESSIONAL ENGINEER

DRAWING NO.: C300

SHEET 1 OF 1

P:\20-000\324-891\CADD\Dwg\DD\324891-DD1-C300.dwg[LAYOUT1] LS:(8/31/2023 - kpacaud) - LP: 8/31/2023 10:12 AM